16324

16323, 16325, 16326

CONDUIT PUCK™ KIT

FOR ASPHALT SHINGLE ROOFS

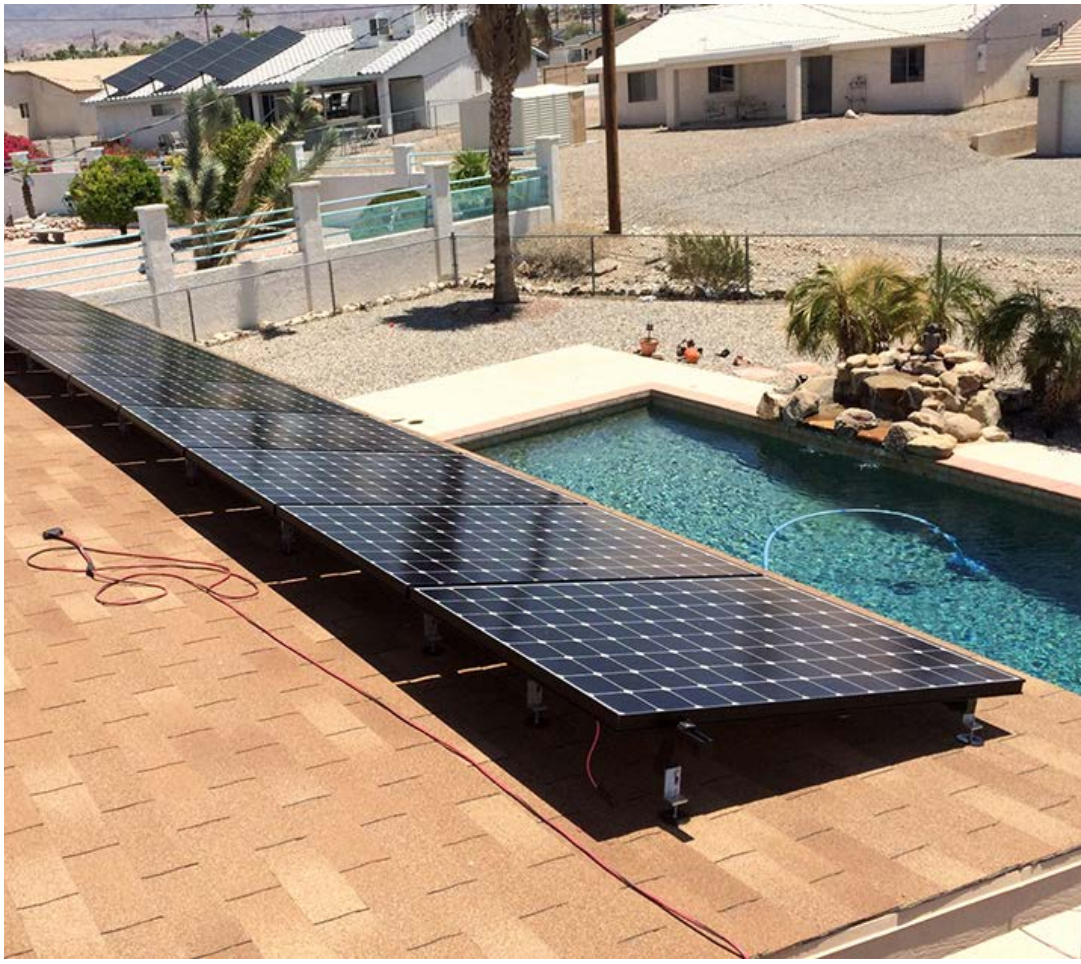

QuickBOLT

A DIVISION OF QUICKSCREWS INTERNATIONAL CORP

TABLE OF CONTENTS

3 SPEC SHEET
QTY & MEASUREMENT INFORMATION

6 INSTALLATION INSTRUCTIONS
STEP-BY-STEP-INSTALLATION GUIDE

7 BUILDING CODE LETTER
REGARDING STAMP DATES

8 ENGINEERING REPORT
UPLIFT & LATERAL LOAD TEST

16 UL REPORT

Quickscrews International Corp. has changed the name of its solar division from SolarRoofHook to QuickBOLT

SPEC SHEET

Part #	Box Quantity	Clip Size	QTY
16323	2-1/4″ EPDM Conduit Puck W/ ¾″ Clip + Screw	3/4″	40/CS
16324	2-1/4″ EPDM Conduit Puck W/ ¾″ Clip + Screw	3/4″	10/PK-3PK/CS
16325	Conduit Clip + M5x25mm Hex Bolt	3/4″	500/CS
16326	Conduit Clip + M5x25mm Hex Bolt	3/4″	100/PK-5PK/CS

QuickBOLT
PN# 16323
3/4" Conduit Clip

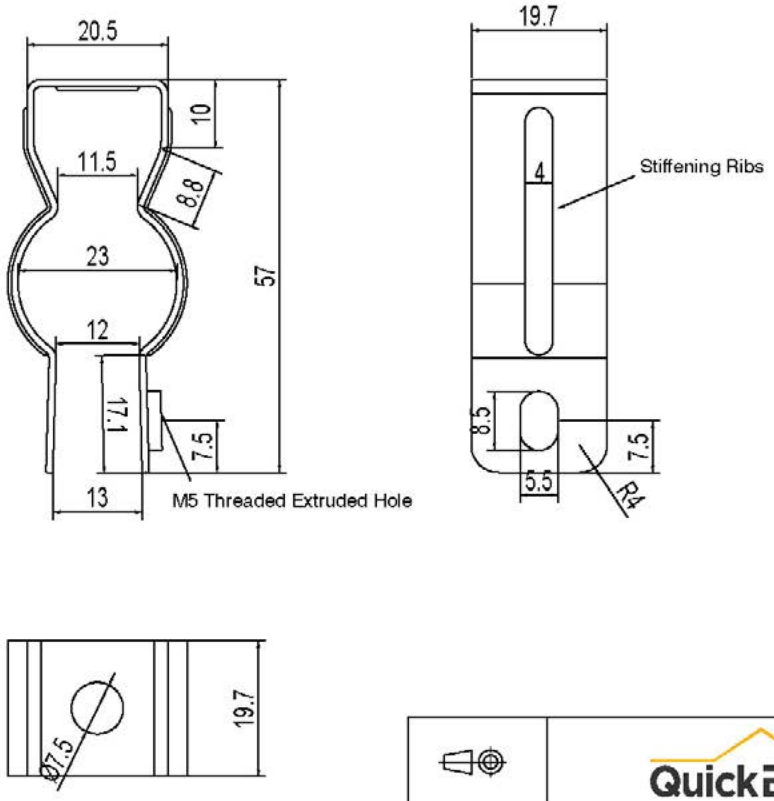

	QuickBOLT				
Design			Scale		Quantity
Drawing			Material		Epdm
Confirm			Drawing No.		
Verify					

Phillips Bold: M5x25mm

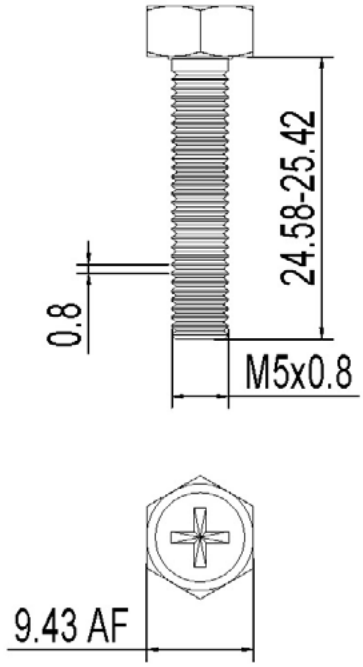

5830 Las Positas Road, Livermore CA 94551 | 3948 Airway Drive, Rock Hill SC 29732
Phone: (844) 671-6045 | Fax: (800) 689-7975 | www.quickbolt.com
QuickBOLT is a division of Quickscrews International Corp.

QuickBOLT
PN# 16323
Conduit Mount
Screws

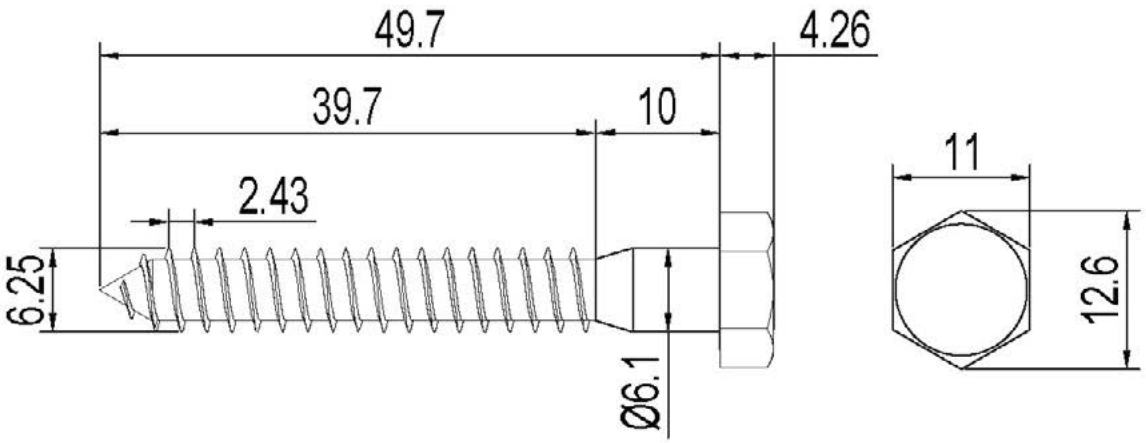

Tolerance Range							
Baiting tolerance	±2 mm						
Hole tolerance	±0.3 mm						
Hole distance tolerance	±0.5 mm	Design			Scale		Quantity
Form tolerance	±2 mm	Drawing			Material		SUS304
Thicknessness tolerance	±0.1 mm	Confirm			Drawing No.		
Angle tolerance	±1° mm	Verify			Finish		

QuickBOLT
PN# 16323
Conduit Mount
EPDM Conduit Block

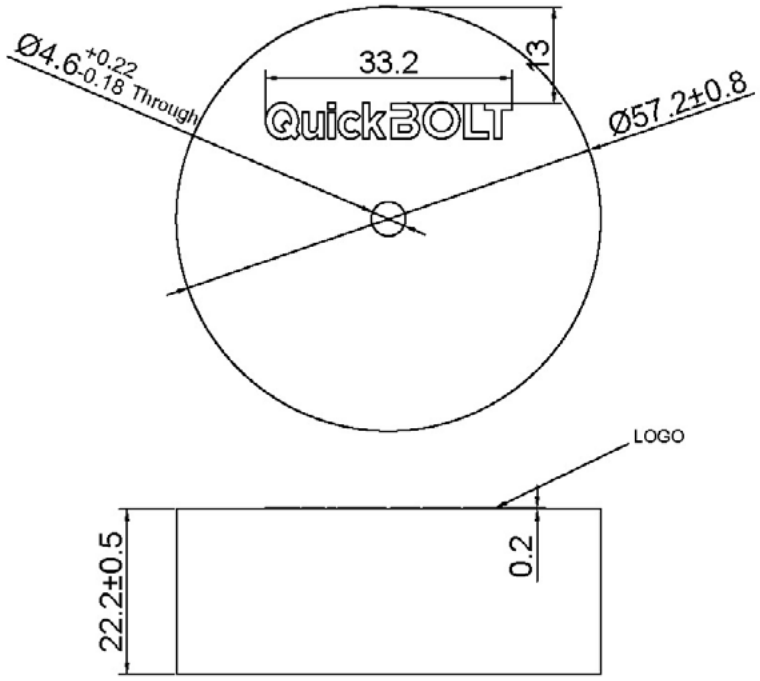

INSTALL INSTRUCTIONS

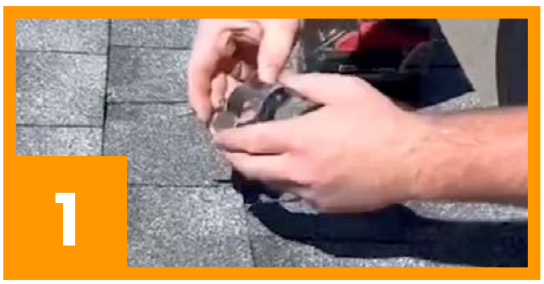

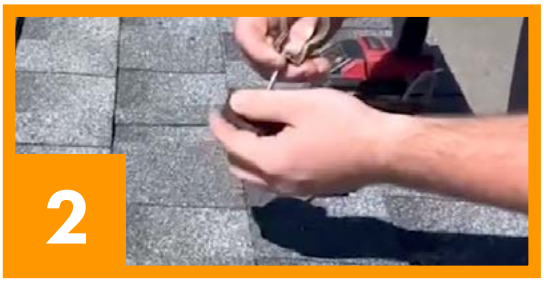

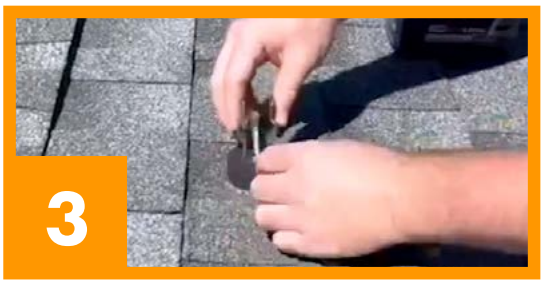

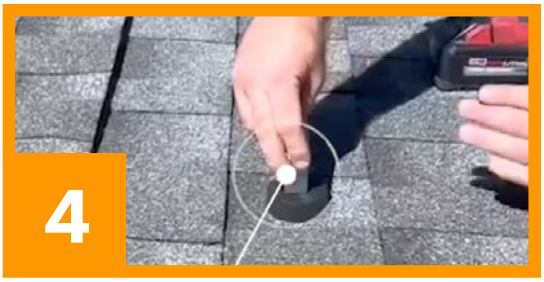

RECOMMENDED MATERIALS

- Impact Driver or Drill
- 7/16th"Hex Driver

INSTALLATION INSTRUCTIONS

1. Open Conduit Clip slightly
2. Place screw through base hole
3. Thread screw with Clip into Puck hold. Just enough so it doesn't fall out
4. Orient clip to conduit direction
5. Use 7/16th screw driver to fasten
6. Thread bolt through clip's top hole. Clip hole is threaded

5830 Las Positas Road, Livermore CA 94551 | 3948 Airway Drive, Rock Hill SC 29732
Phone: (844) 671-6045 | Fax: (800) 689-7975 | www.quickbolt.com
QuickBOLT is a division of Quickscrews International Corp.

BUILDING CODE LETTER

March 22nd, 2023

To whom this may concern,

QuickBOLT is committed to excellence. The parts tested are durable goods, meaning the material composition and detailed specifications of the parts do not change. Therefore, all stamps are current. Any part tested will have the same results no matter what year the tests are performed. All testing and reports are current and valid with 2022 CBC standards.

SolarRoofHook is the previous name of QuickBOLT. Any test result referencing SolarRoofHook is referring to a QuickBOLT product.

All our parts were tested by a third-party test facility, in possession of a current engineering license for the state where the tests were performed for the following.

1. Uplift test
2. Downward load test
3. Lateral Test – Asphalt Mounts, and Metal Mounts only
4. ASTM E2440 and ASTM E330 Waterproof Tests - QuickBOLT only

The following is an excerpt from:

CALIFORNIA BOARD FOR PROFESSIONAL ENGINEERS AND LAND SURVEYORS
guide to Engineering & Land Surveying for City and County Officials
Page 12, Line 27

27. If the license has expired between the time the engineering documents were prepared and the time when the local agency's review is performed, do the documents need to be re-sealed by a licensee with a current license? (B&P Code §§ 6733, 6735, 6735.3, 6735.4)

As long as the license was current at the time the engineering documents were prepared, the documents do not need to be re-sealed prior to review by the local agency. However, any changes (updates or modifications) to the documents that are made following the review by the local agency would have to be prepared by a licensed engineer with a current license and those changes would have to be signed and sealed.

We trust the information provided will resolve any request for the test reports submitted to have a stamp from the current year.

Regards,

Rick Gentry
Executive Vice President

intertek
Total Quality. Assured.

QUICKSCREWS INTERNATIONAL CORP. TEST REPORT

SCOPE OF WORK
TAS 100(A) TESTING on Part# 16321 EPDM Conduit Mount with Screw

REPORT NUMBER
L2941.03-301-18 R0

TEST DATE
08/31/20

ISSUE DATE
09/14/20

RECORD RETENTION END DATE
08/31/25

PAGES
11

DOCUMENT CONTROL NUMBER
ATI 00479 (07/24/17)
RT-R-AMER-Test-2805
© 2017 INTERTEK

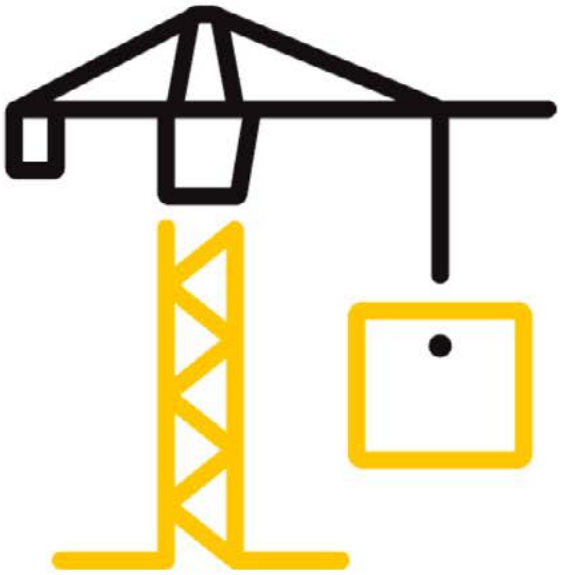

5830 Las Positas Road, Livermore CA 94551 | 3948 Airway Drive, Rock Hill SC 29732
Phone: (844) 671-6045 | Fax: (800) 689-7975 | www.quickbolt.com
QuickBOLT is a division of Quickscrews International Corp.

intertek
Total Quality. Assured.

1909 10th Street, Suite 100
Plano, Texas 75074

Telephone: 469 814 0687
Facsimile: 717-764-4129
www.intertek.com/building

TEST REPORT FOR QUICKSCREWS INTERNATIONAL CORP.
Report No.: L2941.03-301-18 R0
Date: 09/14/20

REPORT ISSUED TO
QUICKBOLT - A DIVISION OF QUICKSCREWS INTERNATIONAL CORP.
5830 Las Positas Road
Livermore, California 94551

SECTION 1
SCOPE

Intertek Building & Construction (B&C) was contracted by Quickscrews Company to perform testing in accordance with TAS 100(A) – 95 testing on their Part# 16321 EPDM Conduit Mount with Screw. Results obtained are tested values and were secured by using the designated test method. Testing was conducted at Intertek B&C test facility in Fresno, California.

This report does not constitute certification of this product nor an opinion or endorsement by this laboratory.

SECTION 2
SUMMARY OF TEST RESULTS

The specimens tested met the performance requirements set forth in the protocols.

Product Type: Solar Mounting Fastener
Series/Model: Part# 16321 EPDM Conduit Mount with Screw

TYLER WESTERLING
LICENSE
No. 72012
STATE OF FLORIDA
PROFESSIONAL ENGINEER

SPEC.	TEST PROTOCOL	LEVEL
1	TAS 100(A) – 95	110 MPH

For INTERTEK B&C:

2020.09.14 12:14:36 -07'00'

COMPLETED BY:	Dennis Janzen	**REVIEWED BY:**	Tyler Westerling, P.E.
TITLE:	Technician	**TITLE:**	Operations Manager
SIGNATURE:	Dennis Janzen Digitally Signed by: Dennis Janzen	**SIGNATURE:**	Tyler Westerling Digitally Signed by: Tyler Westerling
DATE:	09/14/20	**DATE:**	09/14/20

TW:ms

This report is for the exclusive use of Intertek's Client and is provided pursuant to the agreement between Intertek and its Client. Intertek's responsibility and liability are limited to the terms and conditions of the agreement. Intertek assumes no liability to any party, other than to the Client in accordance with the agreement, for any loss, expense or damage occasioned by the use of this report. Only the Client is authorized to permit copying or distribution of this report and then only in its entirety. Any use of the Intertek name or one of its marks for the sale or advertisement of the tested material, product or service must first be approved in writing by Intertek. The observations and test results in this report are relevant only to the sample(s) tested. This report by itself does not imply that the material, product, or service is or has ever been under an Intertek certification program.

intertek
Total Quality. Assured.

1909 10th Street, Suite 100
Plano, Texas 75074

Telephone: 469 814 0687
Facsimile: 717-764-4129
www.intertek.com/building

SECTION 3
TEST METHOD

The specimens were evaluated in accordance with the following:

Testing Application Standard (TAS) No. 100(A) - 1995, *Test Procedure for Wind and Wind Driven Rain Resistance and/or Increased Windspeed Resistance of Soffit Ventilation Strip and Continuous or Intermittent Ventilation System Installed at the Ridge Area*

SECTION 4
MATERIAL SOURCE/INSTALLATION

Test specimen were provided by the client. Representative samples of the test specimen will be retained by Intertek B&C for a minimum of five years from the test completion date.

The specimen was installed into an asphalt shingle test buck with lexan viewing window on the underside. Installation of the tested product was performed by Intertek B&C.

COMPONENT	MATERIAL	DESCRIPTION
Part# 16321 EPDM Conduit Mount with Screw	EPDM/Stainless	2-1/4" by 7/8" thick Mount with 1/4" x 2" Stainless steel lag bolt

SECTION 5
EQUIPMENT

Calibrated Wind Generator - Reference calibration report I6737.03-801-44-r0 for calibration results.

SECTION 6
LIST OF OFFICIAL OBSERVERS

NAME	COMPANY
Dennis Janzen	Intertek B&C
Tyler Westerling	Intertek B&C

5830 Las Positas Road, Livermore CA 94551 | 3948 Airway Drive, Rock Hill SC 29732
Phone: (844) 671-6045 | Fax: (800) 689-7975 | www.quickbolt.com
QuickBOLT is a division of Quickscrews International Corp.

1909 10th Street, Suite 100
Plano, Texas 75074

Telephone: 469 814 0687
Facsimile: 717-764-4129
www.intertek.com/building

SECTION 7
TEST RESULTS

Protocol TAS 100(A) – 95, *Wind Driven Rain Resistance*

Test Date: 05/04/20
The temperature during testing was 35°C (95°F). The results are tabulated as follows:

Test Specimen test results:

Wind Speed	Gallons Sprayed	Inches Per Hour	Gallons Collected	Notes
35	77.02	10.30	0	15 Minutes
70	75.11	10.04	0	15 Minutes
90	79.89	10.68	0	15 Minutes
110	27.88	10.08	0	5 Minutes
Total	**259.9**	11.18	**0**	
1% of total water sprayed	**2.59 Gallons**		**0 Gallons Collected**	**Pass**

***General Note**: All testing was performed in accordance with the referenced standard.*

SECTION 8
CONCLUSIONS

Intertek B&C observed no signs of failure in any area of the test specimens during the test; as such, the test specimens satisfy the requirements of TAS 100(A) – 95.

intertek
Total Quality. Assured.

1909 10th Street, Suite 100
Plano, Texas 75074

Telephone: 469 814 0687
Facsimile: 717-764-4129
www.intertek.com/building

SECTION 9
PHOTOGRAPHS

Photo No. 1

5830 Las Positas Road, Livermore CA 94551 | 3948 Airway Drive, Rock Hill SC 29732
Phone: (844) 671-6045 | Fax: (800) 689-7975 | www.quickbolt.com
QuickBOLT is a division of Quickscrews International Corp.

1909 10th Street, Suite 100
Plano, Texas 75074

Telephone: 469 814 0687
Facsimile: 717-764-4129
www.intertek.com/building

Photo No. 2

1909 10th Street, Suite 100
Plano, Texas 75074

Telephone: 469 814 0687
Facsimile: 717-764-4129
www.intertek.com/building

Photo 3

5830 Las Positas Road, Livermore CA 94551 | 3948 Airway Drive, Rock Hill SC 29732
Phone: (844) 671-6045 | Fax: (800) 689-7975 | www.quickbolt.com
QuickBOLT is a division of Quickscrews International Corp.

intertek
Total Quality. Assured.

1909 10th Street, Suite 100
Plano, Texas 75074

Telephone: 469 814 0687
Facsimile: 717-764-4129
www.intertek.com/building

SECTION 10
REVISION LOG

REVISION #	DATE	PAGES	REVISION
0	09/14/20	N/A	Original Report Issue

UL Solutions

Safety. Science. Transformation.™

03/27/2024

Mr. Rick Gentry
Scame-Parre S P A
QuickBOLT
5830 Las Positas Rd
Livermore CA, 94551
US

Our Reference: File E537898, Project Number 4791077436; Evaluation of 2 sizes EMT hangers
Subject: Close-Out Letter

Dear Mr. Gentry:

As requested in your March 25th e-mail, the referenced project for evaluation of EMT hangers is being closed at this time with no certification granted.

The project cost has been reduced to 7,080 to cover our work to date.

For the record we used requirements from the standards below for this investigation.

Standard	Title	Edition	Publication or Latest Revision Date
UL 2239	Hardware for the Support of Conduit, Tubing and Cable	2nd	January 14, 2022
CSA C22.2 No. 18.4-15	Hardware for the Support of Conduit, Tubing and Cable	2nd	January 14, 2022

All test data is included in this letter report for your reference.

Your business is very important to us and if there is any additional information that we may provide to you about the investigation or UL's other services, please do not hesitate to contact us.

Sincerely,
Walter Roeder
Staff Engineer
Department: 3012CMEL
Tel: 847-664-2758
E-mail: walter.roeder@ul.com

Reviewed by:
Michael Marchessault
Senior Staff Engineer
Department: 3012CMEL

UL LLC
333 Pfingsten Road, Northbrook, IL 60062-2096 USA
T: 847.272.8800 / F: 847.272.8129 / W: UL.com

METALLIC COATING THICKNESS TEST: (WET LOCATION) Clause: 6.3

METHOD

The thickness of three samples of zinc on the hardware device Cat. Nos. 3/4 clip and 1 clip were measured in accordance with the requirements outlined in the Standard for Safety for Hardware for the Support of Conduit, Tubing and Cable, UL 2239.

RESULTS

Ambient Temperature, C	24.6	Relative Humidity, %	NA	Barometric Pressure, mBar	NA

[x] The average thickness of the sample was less than 0.013 mm (0.0005 in.).

[ ] The average thickness of the sample was equal to or greater than 0.013 mm (0.0005 in.).

[x] The minimum thickness of the sample was less than 0.0102 mm (0.0004 in.).

[ ] The minimum thickness of the sample was equal to or greater than 0.0102 mm (0.0004 in.).

[ ] The thickness of the sample was determined by visual inspection.

METALLIC COATING THICKNESS TEST (WET LOCATION) (CONT'D): Clause: 6.3

3/4 Clip

Sample Number	Measured Thickness Inside, mm (in)	Average Thickness Inside, mm (in)	Measured Thickness Outside, mm (in)	Average Thickness Outside, mm (in)
1				
2				
3				

Date	Time, s	Sample No.	Sample Temperature C	Ambient Temperature C	Solution Temperature C
2024/2/23	9:30 am	1-3	24.6	24.6	24.6

Sample Number	Seconds (S)			Factor (F) (See Table 20 below)			Thickness (T), in. ($T_n = 10^{-5} \times S \times F$)			Average Thickness, in.
	S_1	S_2	S_3	F_1	F_2	F_3	T_1	T_2	T_3	
1	18.91	18.43	19.12	1.033	1.033	1.033	0.00019	0.00019	0.00020	0.00019
2	18.39	18.17	17.26	1.033	1.033	1.033	0.00019	0.00019	0.00018	0.00019
3	18.44	19.25	18.33	1.033	1.033	1.033	0.00019	0.00020	0.00019	0.00019

Validated Software ID No.: 66817

Temperature, degrees C (F)	Thickness factors for zinc coating
21.1 (70)	0.980
21.7 (71)	0.990
22.2 (72)	1.000
22.8 (73)	1.010
23.3 (74)	1.015
23.9 (75)	1.025
24.4 (76)	1.033
25.0 (77)	1.042
25.6 (78)	1.050
26.1 (79)	1.060
26.7 (80)	1.070
27.2 (81)	1.080
27.8 (82)	1.085
28.3 (83)	1.095
28.9 (84)	1.100
29.4 (85)	1.110
30.0 (86)	1.120
30.6 (87)	1.130
31.1 (88)	1.141
31.7 (89)	1.150

5830 Las Positas Road, Livermore CA 94551 | 3948 Airway Drive, Rock Hill SC 29732
Phone: (844) 671-6045 | Fax: (800) 689-7975 | www.quickbolt.com
QuickBOLT is a division of Quickscrews International Corp.

METALLIC COATING THICKNESS TEST (WET LOCATION) (CONT'D): Clause: 6.3

1 Clip

Sample Number	Measured Thickness Inside, mm (In)	Average Thickness Inside, mm (In)	Measured Thickness Outside, mm (In)	Average Thickness Outside, mm (In)
1				
2				
3				

Date	Time, s	Sample No.	Sample Temperature C	Ambient Temperature C	Solution Temperature C
2024/2/23	9:30 am	1-3	24.6	24.6	24.6

Sample Number	Seconds (S)			Factor (F) (See Table 20 below)			Thickness (T), in. ($T_n = 10^{-5} \times S \times F$)			Average Thickness, in.
	S_1	S_2	S_3	F_1	F_2	F_3	T_1	T_2	T_3	
1	19.42	19.37	20.12	1.033	1.033	1.033	0.00020	0.00020	0.00021	0.00020
2	18.34	18.81	17.68	1.033	1.033	1.033	0.00019	0.00019	0.00018	0.00019
3	18.57	19.22	19.84	1.033	1.033	1.033	0.00019	0.00020	0.00020	0.00020

Validated Software ID No.: 66817

Temperature, degrees C (F)	Thickness factors for zinc coating
21.1 (70)	0.980
21.7 (71)	0.990
22.2 (72)	1.000
22.8 (73)	1.010
23.3 (74)	1.015
23.9 (75)	1.025
24.4 (76)	1.033
25.0 (77)	1.042
25.6 (78)	1.050
26.1 (79)	1.060
26.7 (80)	1.070
27.2 (81)	1.080
27.8 (82)	1.085
28.3 (83)	1.095
28.9 (84)	1.100
29.4 (85)	1.110
30.0 (86)	1.120
30.6 (87)	1.130
31.1 (88)	1.141
31.7 (89)	1.150

ZINC COATING THICKNESS MEASUREMENT (X-RAY TEST METHOD) (WET LOCATION): Clause: 6.3.1

METHOD

Representative specimens of the zinc coated 3/4 clip and 1 clip were examined on the x-ray coating thickness tester to determine the relative zinc plating thickness.

RESULTS

Ambient Temperature, C 24.8 Relative Humidity, % NA Barometric Pressure, mBar NA

The results of these tests are given in following Table.

3/4 clip

Sample	X-Ray Coating Thickness, mm (in)	X-Ray Coating Thickness, mm (in)	X-Ray Coating Thickness, mm (in)	Average Coating Thickness, mm (in)
1	0.00025	0.00022	0.00024	0.00024
2	0.00024	0.00024	0.00022	0.00023
3	0.00026	0.00023	0.00022	0.00024
4				
5				
6				

1 clip

Sample	X-Ray Coating Thickness, mm (in)	X-Ray Coating Thickness, mm (in)	X-Ray Coating Thickness, mm (in)	Average Coating Thickness, mm (in)
1	0.00018	0.00019	0.00016	0.00018
2	0.00022	0.00021	0.00019	0.00021
3	0.00021	0.00019	0.00023	0.00021
4				
5				
6				

5830 Las Positas Road, Livermore CA 94551 | 3948 Airway Drive, Rock Hill SC 29732
Phone: (844) 671-6045 | Fax: (800) 689-7975 | www.quickbolt.com
QuickBOLT is a division of Quickscrews International Corp.

[x] The average thickness of the samples was less than 0.013 mm (0.0005 in.).

[ ] The average thickness of the sample was greater than 0.013 mm (0.0005 in.).

[x] The average thickness of the sample was less than 0.0038 mm (0.00015 in.).

[ ] The average thickness of the sample was greater than 0.0038 mm (0.00015 in.).

[ ] A visual inspection of the screws indicated the presence of a coating.

Note to lab Technician:
If the above test results statements are checked indicating less than the required value, then this will require that the referee test, the METALLIC COATING THICKNESS TEST described in CLAUSES 6.3.2-6.3.9, be conducted prior to closing this job by the lab.

ASSEMBLY TEST (HANGER): Clause: 6.1.1 and 6.2

METHOD

~~[ ] Three~~ [x] Six samples of a hanger were assembled to 152 mm (6 in.) lengths of ~~[ ] cable [ ] conduit~~ [x] tubing in accordance with the manufacturers installation instructions. [x] In the absence of installation instructions, the device was mounted rigidly to a test fixture and secured to [x] stud-grade pine, ~~[ ] spruce wood [ ] steel stud~~. The hanger screw or bolt that was provided to secure conduit, cable, or tubing to a hardware device or was intended to secure a hanger by direct bearing to a flange, was tightened to the torque values in accordance with the following Table. Unless specified by manufacturer's instructions, a combination head was tested to the torque value in Column 2.

~~Unless indicated by manufacturer's instructions, a bolt head screw and nut combination other than direct bearing, and not having provision for tightening with a screwdriver, was assembled using a torque of 18.1 N·m (160 lbf·in).~~ (Per handler, doesn't apply 2024-3-21)

~~[ ] The minimum and maximum diameter cable, as specified by the manufacturer, were tested.~~

5830 Las Positas Road, Livermore CA 94551 | 3948 Airway Drive, Rock Hill SC 29732
Phone: (844) 671-6045 | Fax: (800) 689-7975 | www.quickbolt.com
QuickBOLT is a division of Quickscrews International Corp.

ASSEMBLY TEST (HANGER): (CONT'D): Clause: 6.1.1 and 6.2

TABLE

	Col. 1	Col. 2
Screw/Bolt Size	Screw tightened with a screwdriver 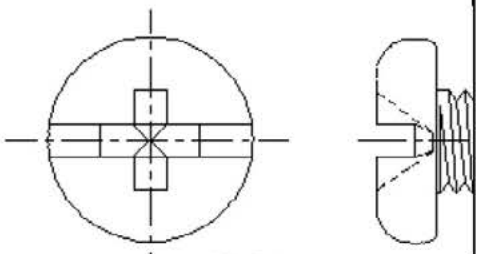 N·m (lbf-in)	Bolt tightened with a Wrench 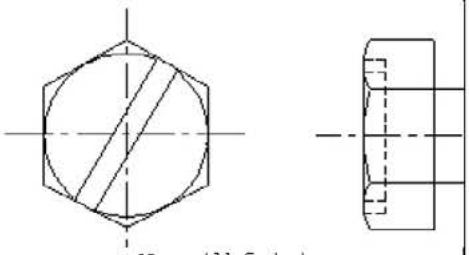 N·m (lbf-in)
No. 6	1.36 (12)	–
No. 8	2.26 (20)	–
No. 10	3.96 (35)	3.96 (35)
1/4	3.96 (35)	4.52 (40)
5/16	3.96 (35)	6.78 (60)
3/8	3.96 (35)	6.78 (60)
7/16	3.96 (35)	10.17 (90)
1/2	3.96 (35)	14.13 (125)
9/16	3.96 (35)	20.34 (180)
5/8	3.96 (35)	28.25 (250)
3/4	3.96 (35)	45.20 (400)
7/8	–	75.15 (665)
1	–	111.87 (990)
Note: These screwhead figures are shown as examples only, and are not intended to represent all possible configurations.		
[a] With reference to Clause 8.2.3, the screw head figures are not applicable.		

ASSEMBLY TEST (HANGER) (CONT'D): Clause: 6.1.1 and 6.2

RESULTS

Ambient Temperature, C	23.4	Relative Humidity, %	NA	Barometric Pressure, mBar	NA

[ ] Part of a hanger cracked.

[x] Part of a hanger did not cracked.

[ ] Part of a hanger broke.

[x] Part of a hanger did not break.

[ ] The screw threads of the hanger stripped.

[x] The screw threads of the hanger did not strip.

[ ] The hanger did decrease the internal diameter of the tubing by more than 15 percent.

[x] The hanger did not decrease the internal diameter of the tubing by more than 15 percent.

[ ] The hanger did decrease the internal diameter of the conduit by more than 15 percent.

[ ] The hanger did not decrease the internal diameter of the conduit by more than 15 percent.

[ ] The appropriate size plug gauge would not pass through the sample.

[x] The appropriate size plug gauge did pass through each sample.

[ ] The conduit was punctured.

[x] The conduit was not punctured.

[ ] There were sharp edges exposed as determined by visual inspection.

[x] There were no sharp edges exposed as determined by visual inspection.

[ ] The hanger was assembled with visible damage to the cable.

[x] The hanger was assembled without visible damage to the cable/conduit.

5830 Las Positas Road, Livermore CA 94551 | 3948 Airway Drive, Rock Hill SC 29732
Phone: (844) 671-6045 | Fax: (800) 689-7975 | www.quickbolt.com
QuickBOLT is a division of Quickscrews International Corp.

ASSEMBLY TEST (HANGER) (CONT'D): Clause: 6.1.1 and 6.2

Trade Size	Sample Number	Sample Cracked	Sample Broke	Screw Threads Stripped	Gauge Passed Through Tubing	~~Gauge Passed Through Conduit~~	Tubing Decreased more than 15 percent	~~Conduit Decreased more than 15 percent~~
3/4	1	[~~Yes~~] [No]	[~~Yes~~] [No]	[~~Yes~~] [No]	[Yes] [~~No~~]	[~~Yes~~] [~~No~~]	[~~Yes~~] [No]	[~~Yes~~] [~~No~~]
	2	[~~Yes~~] [No]	[~~Yes~~] [No]	[~~Yes~~] [No]	[Yes] [~~No~~]	[~~Yes~~] [~~No~~]	[~~Yes~~] [No]	[~~Yes~~] [~~No~~]
	3	[~~Yes~~] [No]	[~~Yes~~] [No]	[~~Yes~~] [No]	[Yes] [~~No~~]	[~~Yes~~] [~~No~~]	[~~Yes~~] [No]	[~~Yes~~] [~~No~~]
	4	[~~Yes~~] [No]	[~~Yes~~] [No]	[~~Yes~~] [No]	[Yes] [~~No~~]	[~~Yes~~] [~~No~~]	[~~Yes~~] [No]	[~~Yes~~] [~~No~~]
	5	[~~Yes~~] [No]	[~~Yes~~] [No]	[~~Yes~~] [No]	[Yes] [~~No~~]	[~~Yes~~] [~~No~~]	[~~Yes~~] [No]	[~~Yes~~] [~~No~~]
	6	[~~Yes~~] [No]	[~~Yes~~] [No]	[~~Yes~~] [No]	[Yes] [~~No~~]	[~~Yes~~] [~~No~~]	[~~Yes~~] [No]	[~~Yes~~] [~~No~~]
1	1	[~~Yes~~] [No]	[~~Yes~~] [No]	[~~Yes~~] [No]	[Yes] [~~No~~]	[~~Yes~~] [~~No~~]	[~~Yes~~] [No]	[~~Yes~~] [~~No~~]
	2	[~~Yes~~] [No]	[~~Yes~~] [No]	[~~Yes~~] [No]	[Yes] [~~No~~]	[~~Yes~~] [~~No~~]	[~~Yes~~] [No]	[~~Yes~~] [~~No~~]
	3	[~~Yes~~] [No]	[~~Yes~~] [No]	[~~Yes~~] [No]	[Yes] [~~No~~]	[~~Yes~~] [~~No~~]	[~~Yes~~] [No]	[~~Yes~~] [~~No~~]
	4	[~~Yes~~] [No]	[~~Yes~~] [No]	[~~Yes~~] [No]	[Yes] [~~No~~]	[~~Yes~~] [~~No~~]	[~~Yes~~] [No]	[~~Yes~~] [~~No~~]
	5	[~~Yes~~] [No]	[~~Yes~~] [No]	[~~Yes~~] [No]	[Yes] [~~No~~]	[~~Yes~~] [~~No~~]	[~~Yes~~] [No]	[~~Yes~~] [~~No~~]
	6	[~~Yes~~] [No]	[~~Yes~~] [No]	[~~Yes~~] [No]	[Yes] [~~No~~]	[~~Yes~~] [~~No~~]	[~~Yes~~] [No]	[~~Yes~~] [~~No~~]

ASSEMBLY TEST (HANGER) (CONT'D): Clause: 6.1.1 and 6.2

Trade Size	Sample Number	Torque Applied, N·M (lb.-in.)	ID of ~~[Tubing] [Conduit]~~ Before Securement, mm (in)	ID of ~~[Tubing] [Conduit]~~ After Securement, mm (in)	Conduit was Punctured	Sharp Edges Exposed	~~Visible Damage to the Cable~~
3/4	1	35	.815	.815	[~~Yes~~] [No]	[~~Yes~~] [No]	~~[Yes] [No]~~
	2	35	.815	.815	[~~Yes~~] [No]	[~~Yes~~] [No]	~~[Yes] [No]~~
	3	35	.815	.815	[~~Yes~~] [No]	[~~Yes~~] [No]	~~[Yes] [No]~~
	4	35	.815	.815	[~~Yes~~] [No]	[~~Yes~~] [No]	~~[Yes] [No]~~
	5	35	.815	.815	[~~Yes~~] [No]	[~~Yes~~] [No]	~~[Yes] [No]~~
	6	35	.815	.815	[~~Yes~~] [No]	[~~Yes~~] [No]	~~[Yes] [No]~~
1	1	35	1.045	1.045	[~~Yes~~] [No]	[~~Yes~~] [No]	~~[Yes] [No]~~
	2	35	1.045	1.045	[~~Yes~~] [No]	[~~Yes~~] [No]	~~[Yes] [No]~~
	3	35	1.045	1.045	[~~Yes~~] [No]	[~~Yes~~] [No]	~~[Yes] [No]~~
	4	35	1.045	1.045	[~~Yes~~] [No]	[~~Yes~~] [No]	~~[Yes] [No]~~
	5	35	1.045	1.045	[~~Yes~~] [No]	[~~Yes~~] [No]	~~[Yes] [No]~~
	6	35	1.045	1.045	[~~Yes~~] [No]	[~~Yes~~] [No]	~~[Yes] [No]~~

5830 Las Positas Road, Livermore CA 94551 | 3948 Airway Drive, Rock Hill SC 29732
Phone: (844) 671-6045 | Fax: (800) 689-7975 | www.quickbolt.com
QuickBOLT is a division of Quickscrews International Corp.

PULL TEST (HANGER): Clause: 7.2

METHOD

[x] The same samples from the Assembly Test were used for this test.

~~[ ] The same samples of a polymeric material from the Mold Stress Test, Assembly Test sequence were used for this test.~~

The device was installed on a [x] horizontal ~~[ ] vertical~~ surface and a pull force specified in the following table was applied normal to the surface for 5 minutes in a downward direction. Refer to Figure 1 below for conducting the Pull Test.

Figure 1:

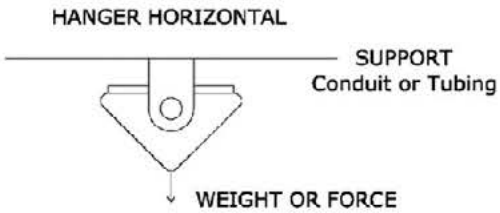

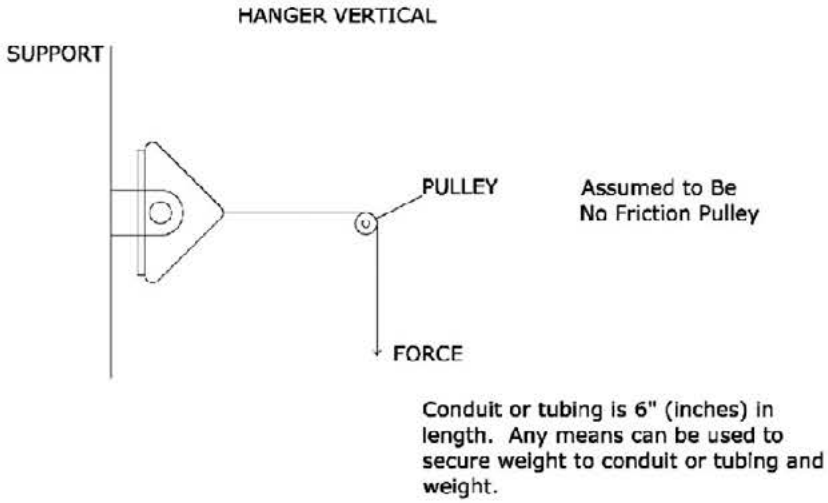

PULL TEST (HANGER) (CONT'D): Clause: 7.2

Clause: 7.2TABLE

		Pull force/LOAD RATING					
		Electrical metallic tubing (EMT)[a]		Rigid metal conduit (RMC), intermediate metal conduit (IMC)[a, c]		Rigid PVC conduit	
Trade size	(Metric designator)	Pull force (N)	Reference LOAD RATING (kg)	Pull force (N)	Reference LOAD RATING (kg)	Pull force (N)	Reference LOAD RATING (kg)
1/2	(16)	667	23	667	23	667	23
3/4	(21)	667	23	667	23	667	23
1	(27)	845	27	845	27	712	23
1-1/4	(35)	1001	34	1001	34	778	25
1-1/2	(41)	1112	36	1112	36	801	27
2	(53)	1334	45	1334	45	890	29
2-1/2	(63)	1668	57	1668	57	1112	36
				2113[b]	73[b]		
3	(78)	2224	73	2224	75	1334	45
				3892[b]	134[b]		
3-1/2	(91)	2669	91	2668	91	1668	57
				5004[b]	170[b]		
4	(103)	3114	150	3114	150	2002	68
				6228[b]	213[b]		
5	(129)	-	-	4448	150	2669	91
				8452[b]	288[b]		
6	(155)	-	-	4448	197	4003	136
				8452[b]	404[b]		

[a] Horizontal support intervals are limited to 3.05 m (10 ft) maximum.

[b] In the United States, suitable for horizontal support intervals greater than 3.05 m (10 ft), not exceeding 3.7 m (12 ft) for trade size 1 (27), 4.3 m (14 ft) for trade sizes 1-1/4 (35) and 1-1/2 (41), 4.9 m (16 ft) for trade sizes 2 and 2-1/2 (63), and 6.10 m (20 ft) for trade size 3 and larger. In Canada, this does not apply.

[c] In Canada, intermediate metal conduit is not recognized by the Canadian Electrical Code.

NOTE: This table includes SI (metric) units. See the following Table for equivalent values.

5830 Las Positas Road, Livermore CA 94551 | 3948 Airway Drive, Rock Hill SC 29732
Phone: (844) 671-6045 | Fax: (800) 689-7975 | www.quickbolt.com
QuickBOLT is a division of Quickscrews International Corp.

PULL TEST (HANGER) (CONT'D): Clause: 7.2

		Pull force/LOAD RATING					
		Electrical metallic tubing (EMT)[a]		Rigid metal conduit (RMC), intermediate metal conduit (TMC)[a, c]		Rigid PVC conduit	
Trade size	(Metric designator)	Pull force (lbf)	Reference LOAD RATING (lb)	Pull force (lbf)	Reference LOAD RATING (lb)	Pull force (lbf)	Reference LOAD RATING (lb)
1/2	(16)	150	50	150	50	150	50
3/4	(21)	150	50	150	50	150	50
1	(27)	190	60	190	60	160	50
1-1/4	(35)	225	75	225	75	175	55
1-1/2	(41)	250	80	250	80	180	60
2	(53)	300	100	300	100	200	65
2-1/2	(63)	375	125	375	125	250	80
				475[b]	160[b]		
3	(78)	500	160	500	165	300	100
				875[b]	295[b]		
3-1/2	(91)	600	200	600	200	375	125
				1125[b]	375[b]		
4	(103)	700	230	700	230	450	150
				1400[b]	470[b]		
5	(129)	-	-	1000	330	600	200
				1900[b]	635[b]		
6	(155)	-	-	1000	435	900	300
				1900[b]	890[b]		

[a] Horizontal support intervals are limited to 3.05 m (10 ft) maximum.

[b] In the United States, suitable for horizontal support intervals greater than 3.05 m (10 ft), not exceeding 3.7 m (12 ft) for trade size 1 (27), 4.3 m (14 ft) for trade sizes 1-1/4 (35) and 1-1/2 (41), 4.9 m (16 ft) for trade sizes 2 and 2-1/2 (63), and 6.10 m (20 ft) for trade size 3 and larger. In Canada, this does not apply.

[c] In Canada, intermediate metal conduit is not recognized by the Canadian Electrical Code.

PULL TEST (HANGER) (CONT'D): Clause: 7.2

TABLE

		Direction of Pull, Horz. (H) Vert. (V)							
		Sample Number							
Catalog Numbers	Force lbf	1	2	3	4	5	6	Mounting Surface	Comments
3/4 clip	150	v	v	v	v	v	v	Stud-grade pine	
1 clip	190	v	v	v	v	v	v	Stud-grade pine	

RESULTS

Ambient Temperature, C 23.4 Relative Humidity, % NA Barometric Pressure, mBar NA

[x] The [ ] cable [ ] conduit [x] tubing did remain secure and intact.

[ ] The [ ] cable [ ] conduit [ ] tubing did not remain secure.

[ ] The [ ] cable [ ] conduit [ ] tubing did not remain intact.

5830 Las Positas Road, Livermore CA 94551 | 3948 Airway Drive, Rock Hill SC 29732
Phone: (844) 671-6045 | Fax: (800) 689-7975 | www.quickbolt.com
QuickBOLT is a division of Quickscrews International Corp.